REVISIONS					
ZONE	LTR	DESCRIPTION	CHANGE No	DATE	BY	APPR'D
	A	RELEASED FOR QUOTE	DR27519	20JUL10	RMB	DJC
	B	RELEASED FOR PRODUCTION	73104	06AUG10	RMB	DJC

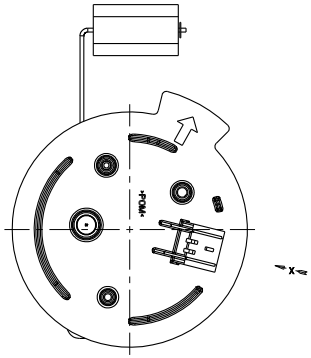

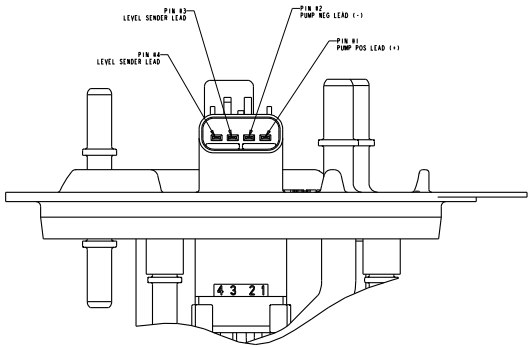

E-CONNECTOR PIN OUT DETAIL
PARTIAL VIEW IN DIRECTION OF ARROW "X"
SCALE 2:1

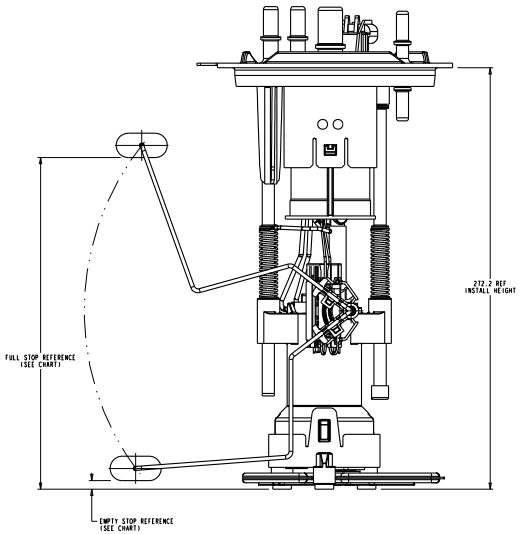

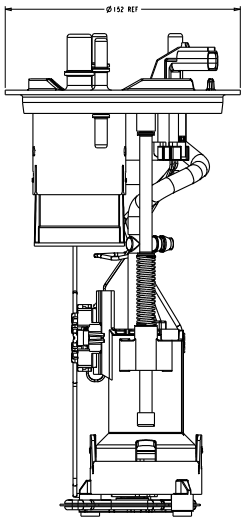

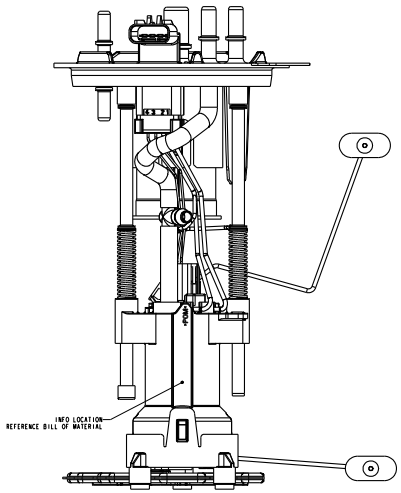

LEVEL SENDER UNIT HEIGHT VS RESISTANCE		
FLOAT POSITION	HEIGHT (mm)	RESISTANCE (Ohms)
FULL STOP	213.7 REF	138.6 ± 4
EMPTY STOP	5.0 REF	7.4 ± 2

NOTES:

1. SPECIAL CUSTOMED PACKAGING REQUIREMENTS MAY CALL FOR THE ADDITION OF SPECIFIC LABELS NOT SHOWN ON THIS DRAWING.
2. MODULE TO BE PACKAGED USING COMPONENTS NOTED ON BOM SO THAT CONTAMINATION FROM FOREIGN MATERIAL IS PREVENTED:
   - PLUG PROTECTORS ON PORTS
   - POLY BAG
3. SHOWN WIRE ROUTING MAY DIFFER FROM FINISHED PRODUCT.

METRIC
ALL DIMENSIONS ARE IN MILLIMETERS

DO NOT SCALE

DECIMAL TOLERANCES UNLESS OTHERWISE SPECIFIED
ONE PLACE ±0.25 TWO PLACE ±0.13 ANGLES ±1°

THIRD ANGLE PROJECTION

DIMENSIONS IN ACCORDANCE WITH ASME Y14.5 - 2009

TI Automotive
630 COLUMBIA ST.
CARO, MI 48723
+1 989.673.7727

ENGINEER	D.CATLIN	09JUN10	MATERIAL/SPECIFICATION: N/A
DES.MANAGER			
DESIGNER	M.BRUBAKER	02FEB10	
CAD SYSTEM: PRO/E	SCALE: 1:1		SHEET NO. 1 OF 1
REFERENCE DRWG: CAD: AR0027607/AB			FOR REFERENCE ONLY: 00010410D/AA
REFERENCE DRWG:			FOR REFERENCE ONLY:

THIS DRAWING IS THE PROPERTY OF TI AUTOMOTIVE. THE INFORMATION CONTAINED IN THIS DRAWING IS THE SOLE PROPRIETARY PROPERTY OF TI AUTOMOTIVE. ANY REPRODUCTION IN PART OR AS A WHOLE WITHOUT THE WRITTEN PERMISSION OF TI AUTOMOTIVE IS PROHIBITED. THIS DRAWING IS TO BE RETURNED TO TI AUTOMOTIVE UPON REQUEST.

DRAWING TITLE: FUEL MODULE OUTLINE (F150FFV,L-TANK)

SIZE: A0 | DRAWING NO./REV: TU275 / REV B